When failure is not an option.

HYPERTAC
HYPERTRONICS

KFT Series

High Density, Low Profile Mezzanine Connectors

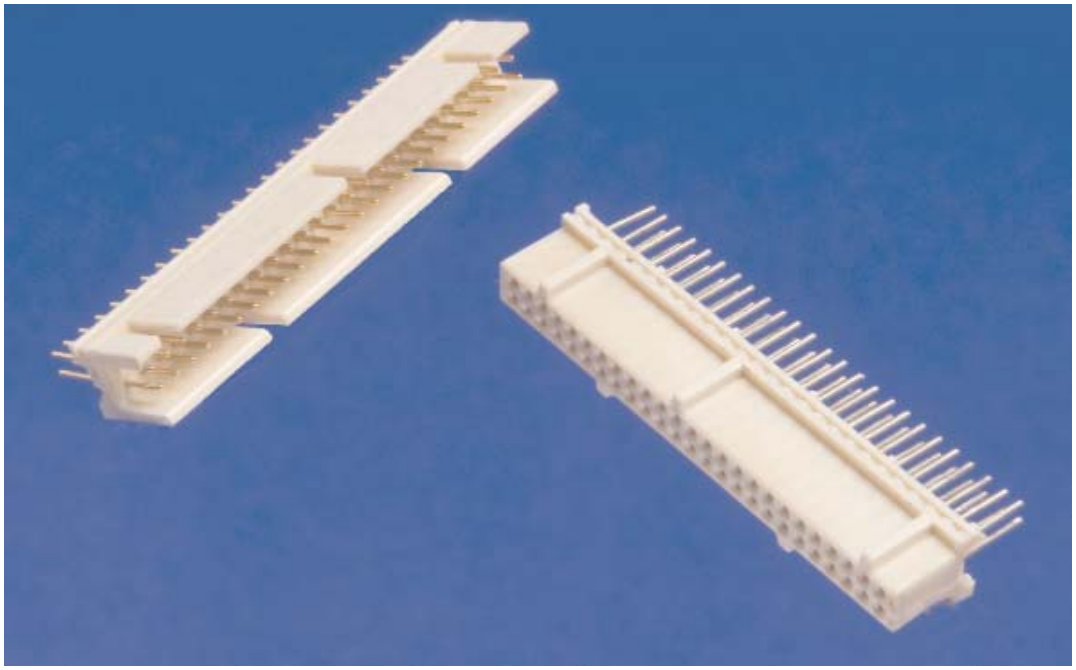

Fine Pitch, 0.050 in. (1.27mm) Spacing

0.343 in. (8.71mm) Stacking Height

Low Profile, Dual Row In-Line Connector

Immune to Shock and Vibration Fretting

Glass Filled LCP Insulator

Fine Pitch Rectangular Stacking Connectors

Hypertronics KFT Series provides a low profile, dual row in-line interconnect solution ideally suited for stacking and use in areas where board real estate is at a premium. With the increasing need to reduce size and weight, KFT is designed to be miniature, allowing higher signal counts in smaller spaces by providing a 0.050 in. (1.27mm) contact pitch and a board-to-board stack height of just 0.343 in. (8.71mm).

Like all Hypertronics products, KFT connectors are highly engineered to allow for top performance under all dynamic environmental conditions. Through the use of the proven 0.40mm Hypertac® hyperboloid contact, KFT connectors provide immunity to shock and vibration fretting, numerous linear paths of contact, and a self-cleaning wipe action that results in consistently better signal integrity for high reliability applications across a wide range of industries. The Hypertac contact system offers low insertion and extraction forces, low contact resistance, as well as industry leading mating cycles in the tens of thousands.

Manufactured with 30 percent glass filled liquid crystal polymer (LCP) insulators and potted contacts, KFT connectors withstand the high temperatures associated with soldering. The LCP insulators also exceed NASA space requirements for outgassing and have inherent keying features to prevent improper mating. KFT connectors are also available with optional snap-on mounting brackets for additional support.

KFT Series connectors perform under the most severe conditions, giving them the edge in demanding critical applications for military, aerospace, industrial, and medical devices where failure is not an option.

KFT Series

Features

- 50, 100, and 140-way versions
- 0.050 in. (1.27mm) pitch high density connector
- 0.343 in. (8.71mm) stacking height
- Low profile and light weight
- Optional snap-on mounting brackets
- 0.40mm diameter hyperboloid sockets
- Long life, high reliability contact system
- Inherent keying offsets
- Glass filled LCP insulators
- Gold and solder tail options available
- For through-hole PCB up to 0.125 in. (3.18mm)

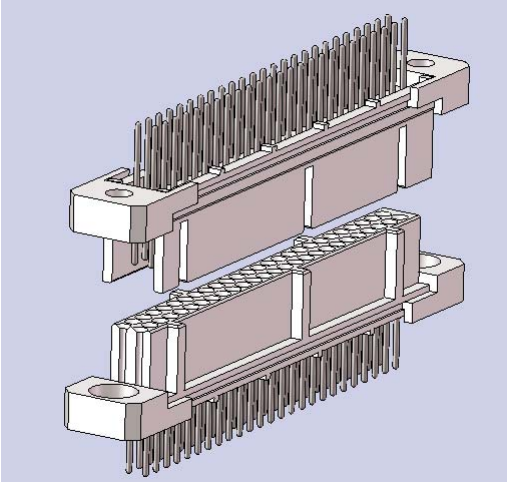

KFT Series connector with optional mounting brackets

Hypertac® Contact System

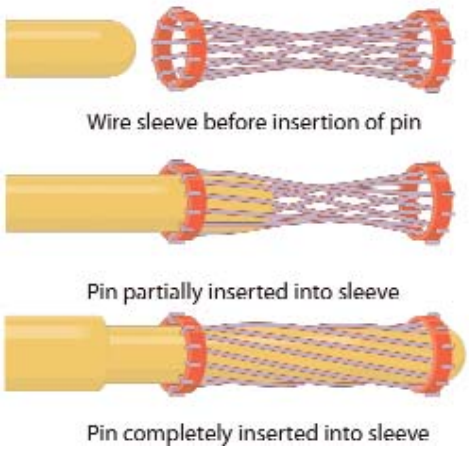

General Specifications	
Number of Contacts	50, 100, 140
Pitch	0.050 in. (1.27mm)
Current Rating	1 Amp per contact
Contact Resistance	<8 milliohms
Extraction Force	0.30 to 1.60 oz.
Contact Life Cycles	Up to 100,000
Insulation Resistance	10 megohms at 500 VDC
DWV	500V RMS
Temperature Rating	-55º C to 125º C
Insulator Material	LCP (Liquid Crystal Polymer)
Contact Plating - Pin	50 µin gold over nickel
Contact Plating - Socket	50 µin gold over nickel on mating surface
PCB Plated Through-Hole Diameter	0.021 in. (0.53mm)
Termination Length	0.157 in. (4.00mm)
Flammability Rating	UL94-V0

HYPERTAC HYPERTRONICS

Hypertronics Corporation
16 Brent Drive
Hudson, MA 01749-2978
Toll Free: 1-800-225-9228
Phone: +1 978-568-0451
Fax: +1 978-568-0680
www.hypertronics.com

smiths
bringing technology to life

Copyright© 2008 Hypertronics Corporation - All rights reserved.
Hypertac is a registered trademark of Smiths and/or its subsidiaries and affiliates. HYPERTRONICS and the H logo are trademarks of Hypertronics Corporation. All other names and marks are property of their respective owners.

HYP-027-0108